GOLDSTAR PC-58B Chassis

General Information

1996
Chassis: PC-58B
CRT: A51EAL55*02
Remote Control: 105-229H
Door Flap: 315-629A
Main Power Button: 441-403A
Batter Cover: 303-H73A

Matrix

Item	See Model
Safety Notes	Goldstar 14A50
X-Ray Precautions	Goldstar 29C42/F
Electrical Adjustments	Goldstar PC-58A Chassis
CRT Adjustments	Goldstar 14A80F
CRT Conversion Table	Goldstar PC-58A Chassis
Troubleshooting Guides	Goldstar PC-58A Chassis
Remote Control Diagram	Goldstar PC-58A Chassis

Pre Amp Diagram

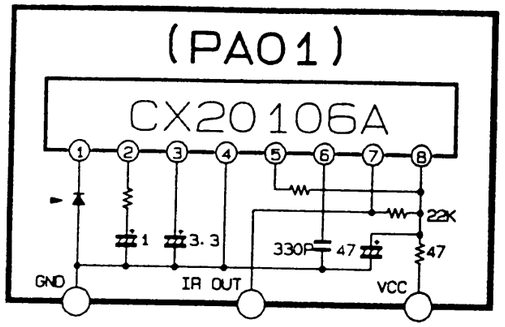

Recommended Safety Parts

Item	Part No.	Description
3	170-851B	Lead Set ASSY, CPT Earth (L = 640)
4	150-D02N	Degaussing Coil CU 21" 60T 120 ohm
41	174-322A	Power Cord W/Filter L = 200 (179B)VDE
46	112-C21C	CPT A51EAL55*02 (Philips)
C401	181-013D	C, MPP 0.43µF 200V J
C454	181-015J	C, MPP 0.0086µF 1600V H
C850	181-120E	Capacitor ACT 4KV E 222M FL10
FR703	0RF0561H609	R, Fusible 5.6 1/2W 5%
FR705	0RF0101H609	R, Fusible 1.0 1/2W 5%
IC301	0IPH835100B	IC Philips TDA8351-N4 9SIP V/OUT (W/0E/W)
IC801	0ISK670700B	IC SANKEN STR/S6707 (LF. 953) 9P (R5, R6)
IC852	0ISK110000A	IC SANKEN SE110N (LF12) 3P 110V Error AMP
L401	150-L02C	Coil H-Linearity 170UH
L852	150-F09A	Coil Line Filter (7 - 14MH SQE)
L856	150-C02F	Coil Choke 82UH R1217
Q402	0TR249900AA	Transistor KTD2499 TO-3P(H)IS Toshiba
Q801	0TR385200AA	Transistor 2SC3852A SANKEN
R359	0RF0102H609	R, Fusible 10 1/2W 5%
R801	180-A03A	R, RW RECT G 5W 2.2 J Double
R861	180-C01C	Resistor RC 1/2W 8.2M K TA52
SC851, SC853	181-017D	C, MPP AC250V 0.22µF K
SF851	131-098B	Fuse 4A 250V HBC Time Delay 5 X 20
SG901	165-004A	Spark Gap AG02PT 152F-L3N/S-23
SK901	381-226D	Socket CPT PCS628-01S/LESS BULK (NO5)
SR800	180-783D	Resistor RC 1/2W 474K Taping
ST802	150-982C	Coil Line Filter 23MH SQE
SVA851	164-003D	Varistor SVC 561D-14A

LFB Diagram

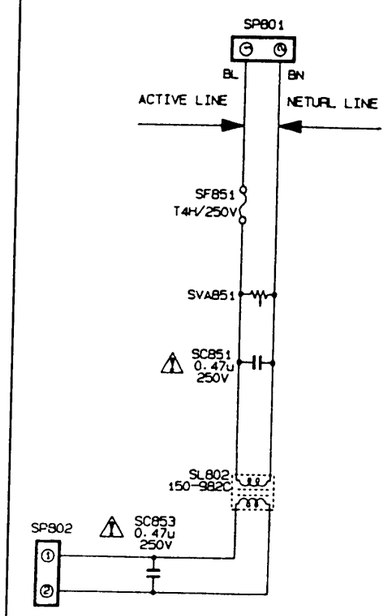

CRT Diagram

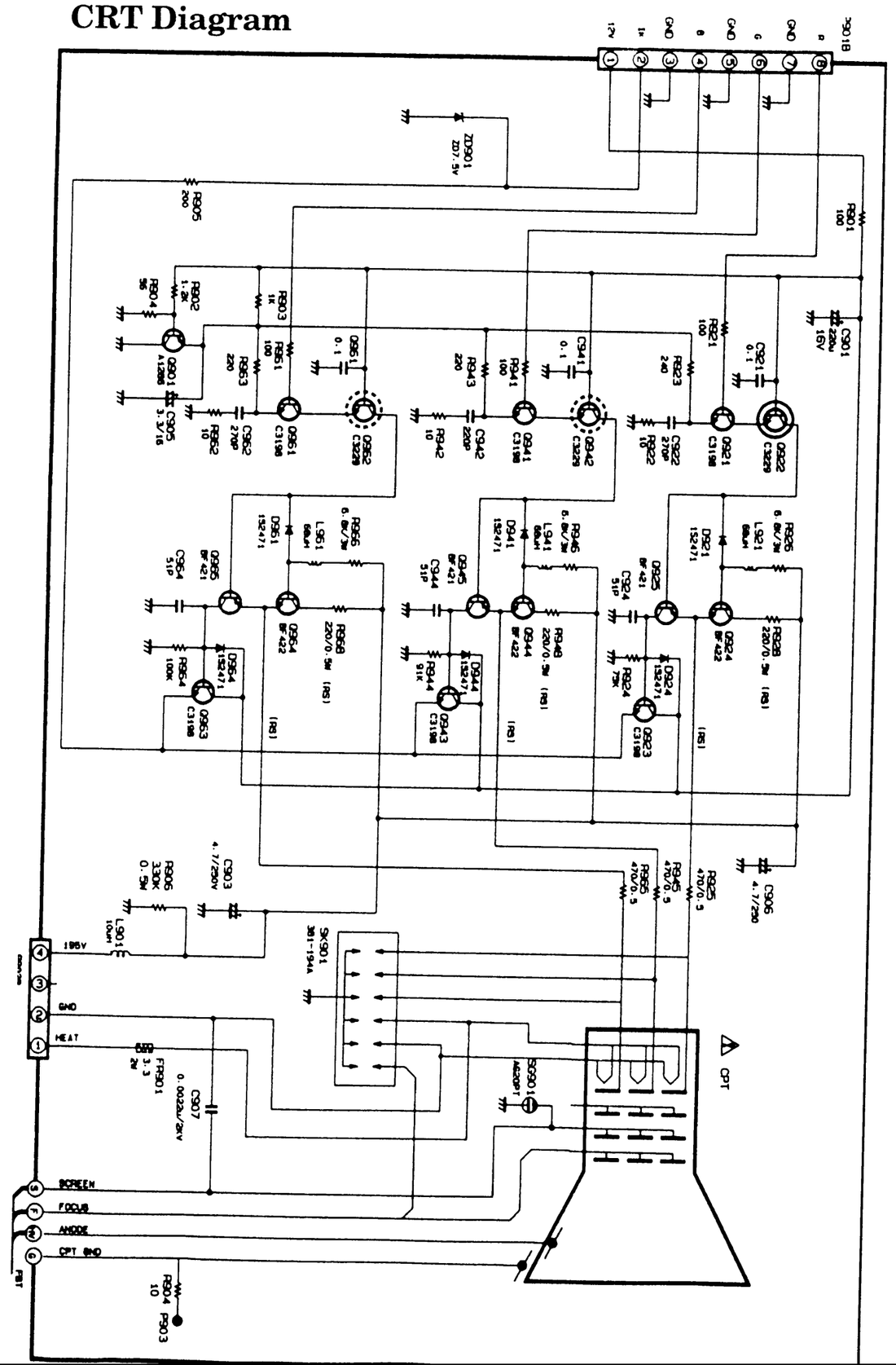

Power Def Diagram

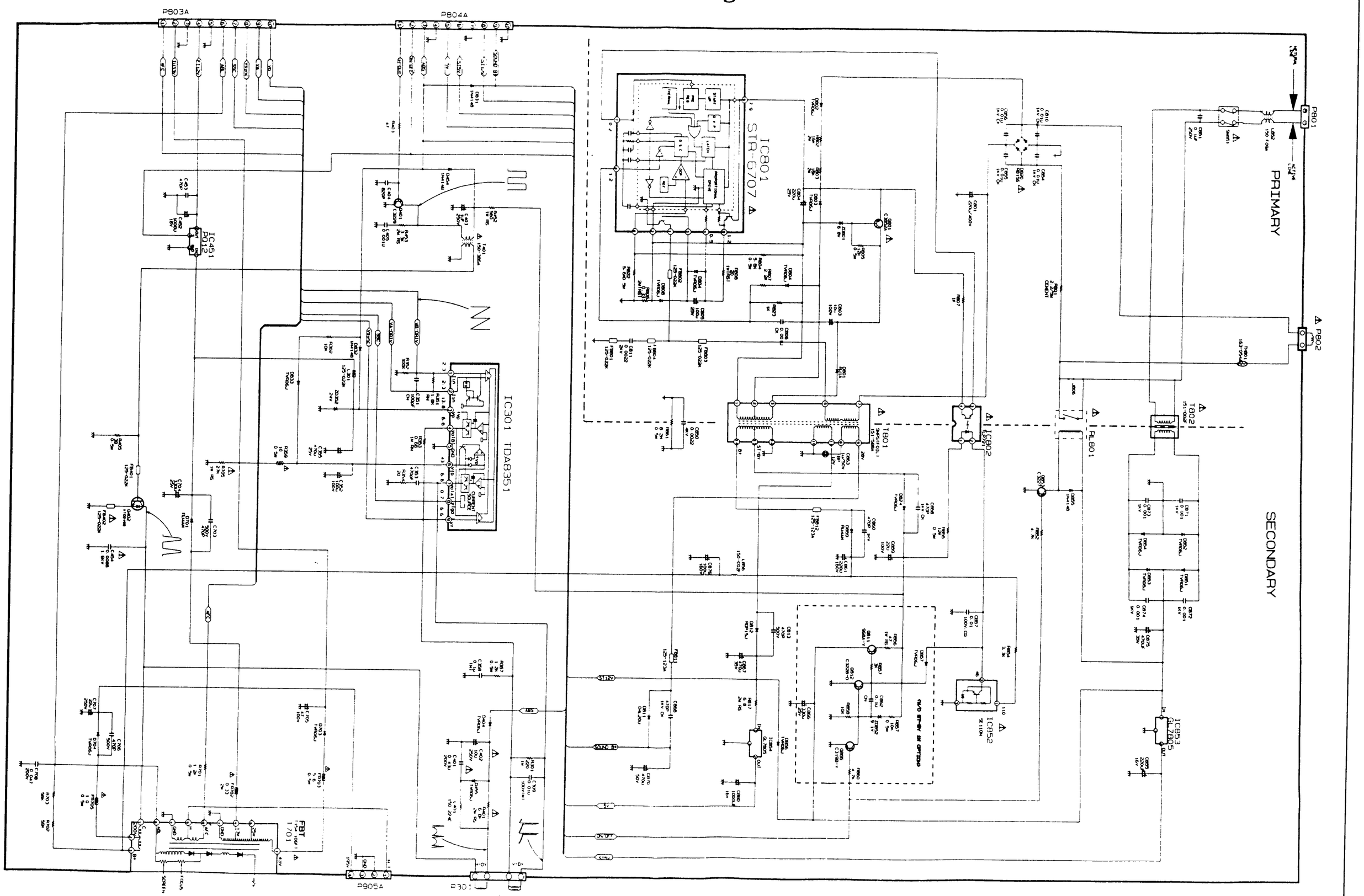
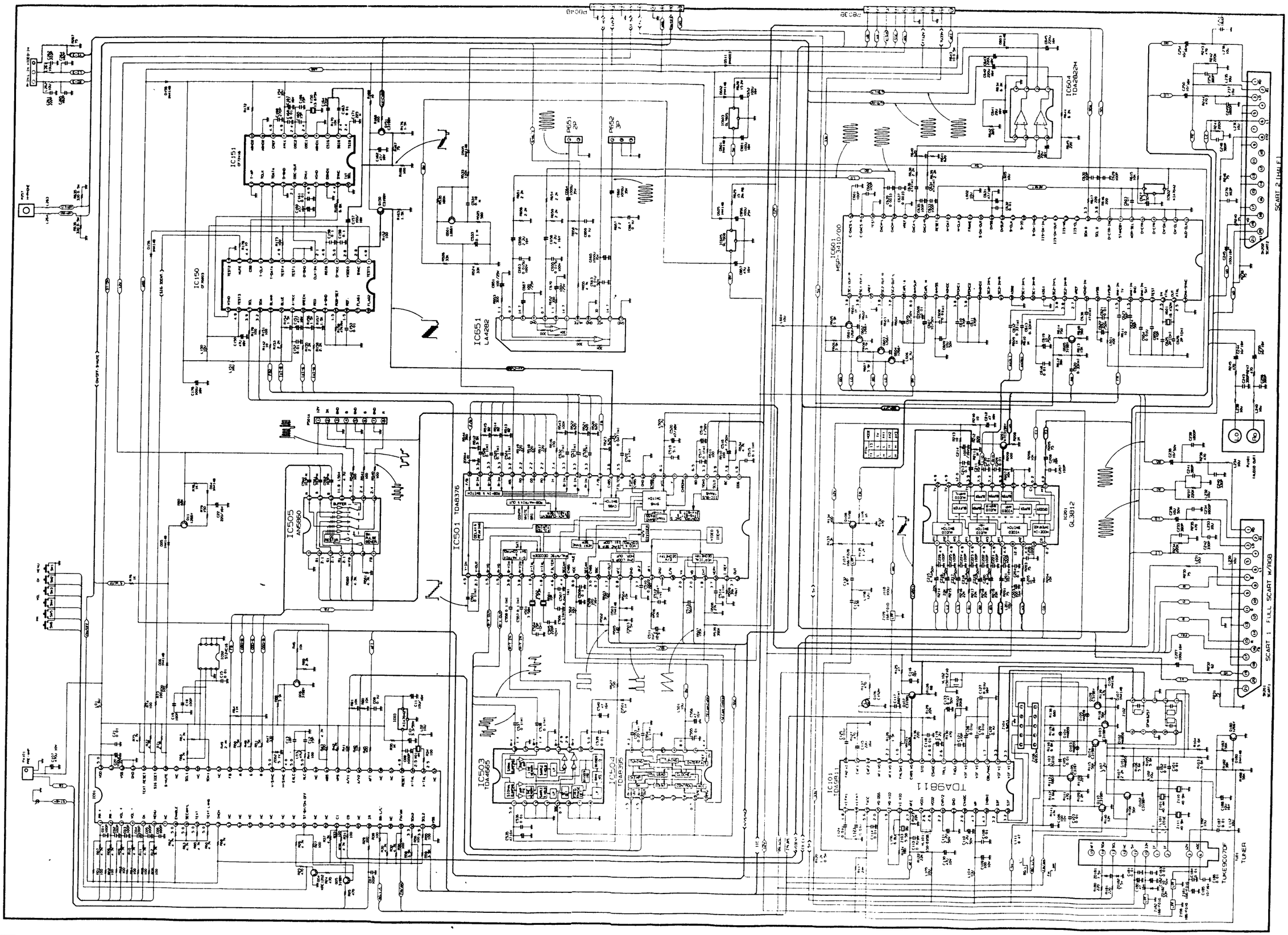
Main Diagram